Parts Catalog



FS12

Flywheel Slicer

Model: FS12

05/22/2023 Rev B
IMPORTANT!
TO EXPEDITE SHIPMENT OF PARTS, ALWAYS SPECIFY MODEL, REV,
PART NUMBER, AND SERIAL NUMBER OF UNIT.

GLOBE FOOD EQUIPMENT COMPANY

2215 East River Road
Dayton, Ohio 45439

Parts Department
Toll Free 1-800-745-6238 · Fax (937) 290-0585
E-Mail: info@globefoodequip.com
Website: www.globefoodequip.com

Not for resale

© Globe Food Equipment Company, 2023

Table of Contents

Description	Page
FS12 Machine Base Components	4
FS12 Slide Rod Components	6
FS12 Knife Blade Components	8
FS12 Carriage Assembly Components	10
FS12 Carriage Slide Components	12
FS12 Product Holder Components	14
FS12 Product Tray Components	16
FS12 Sharpener Assembly Components	18

FS12 Machine Base Components

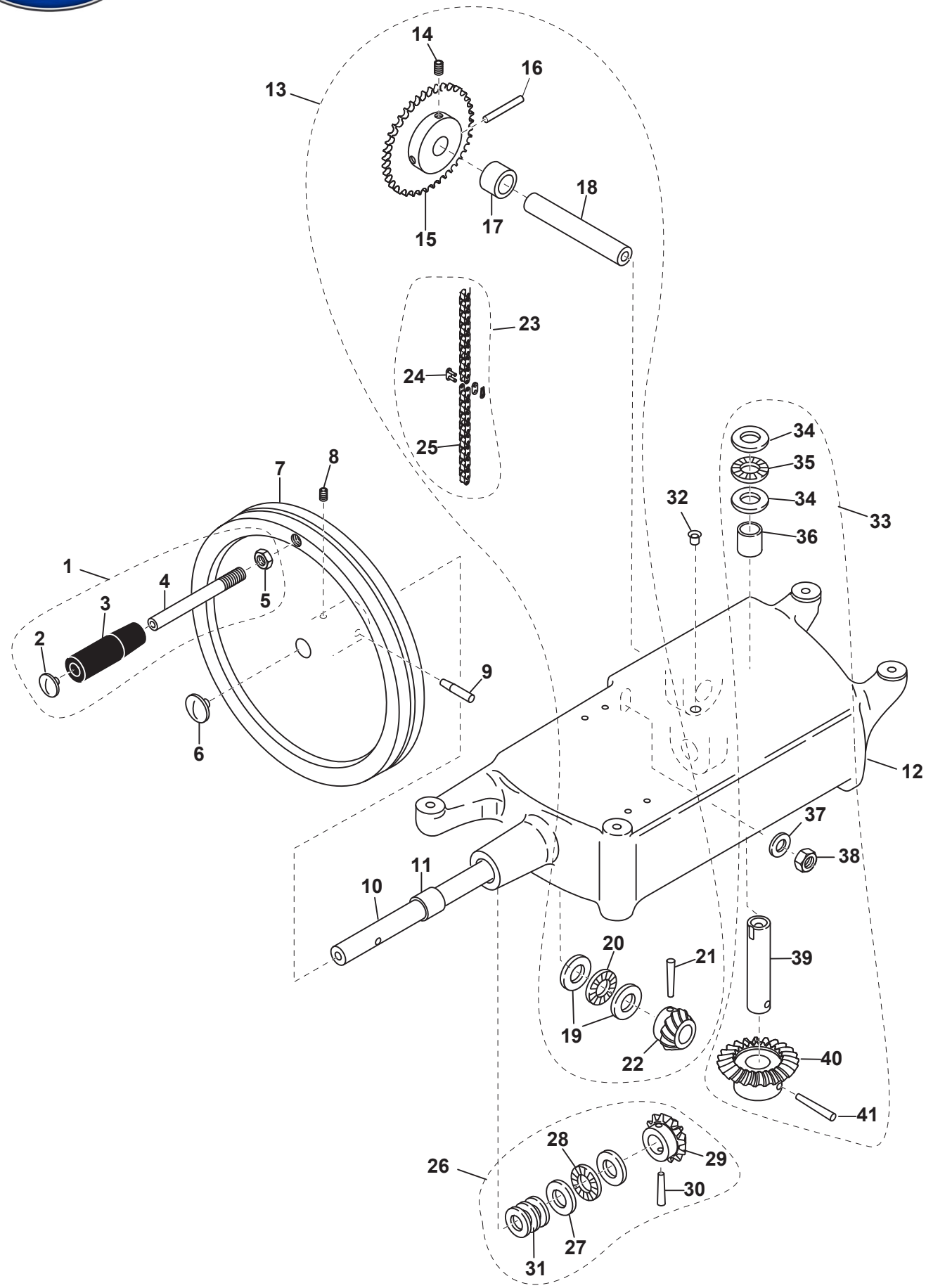

© Globe Food Equipment Company

FS12 Machine Base Components

Item	Part Number	Description	Qty	Serial Number
1	R01598	Handle Assembly (Incls. items 2-5)	1	
2	R01687	Chrome Screw	1	
3		Operating Handle, Flywheel	1	
4	R01381	Pin M12-1.75x50 mm	1	
5		Nut M12-1.25 Hex Jam	1	
6	R01687	Chrome Screw	1	
7		Flywheel	1	
8	H01683	Set Screw M6-1.0 x .7mm	1	
9	R01595	Tapered Pin	1	
10		Flywheel Shaft	1	
11		Bushing	1	
12		Slicer Base	1	
13	R02338	Drive Chain Assembly (Incls. items 14-25)	1	
14	H01683	Set Screw M6-1.0 x .7mm	1	
15	R02105	Sprocket	1	
16	R01595	Tapered Pin	1	
17		Bushing	1	
18		Shaft, Gear	1	
19		Bearing	2	
20		Axle Bearing	1	
21	R01595	Tapered Pin	1	
22		Gear	1	
23	R02561	Chain Assembly (Incls. items 24-25)	1	
24	R01605	Drive Chain	1	
25	R02562	Chain Connector	1	
26	R02343	Axle Kit (Incls. items 27-31)	1	
27		Bearing	2	
28		Axle Bearing	1	
29		Gear	1	
30	R01595	Tapered Pin	1	
31	H02247	Thick Washer 1.4" OD x 1" ID	3	
32	R02184	Oil Fitting	2	
33	R02345	Bearing Assembly, Bevel Gear (Incls. items 34-41)	1	
34		Bearing	2	
35		Axle Bearing	1	
36		Bushing	2	
37		Washer, Lock	2	
38		Nut M12-1.25 Hex Jam	1	
39		Shaft, Gear	1	
40		Gear, Bevel	1	
41	R01595	Tapered Pin	1	

© Globe Food Equipment Company

FS12 Slide Rod Components

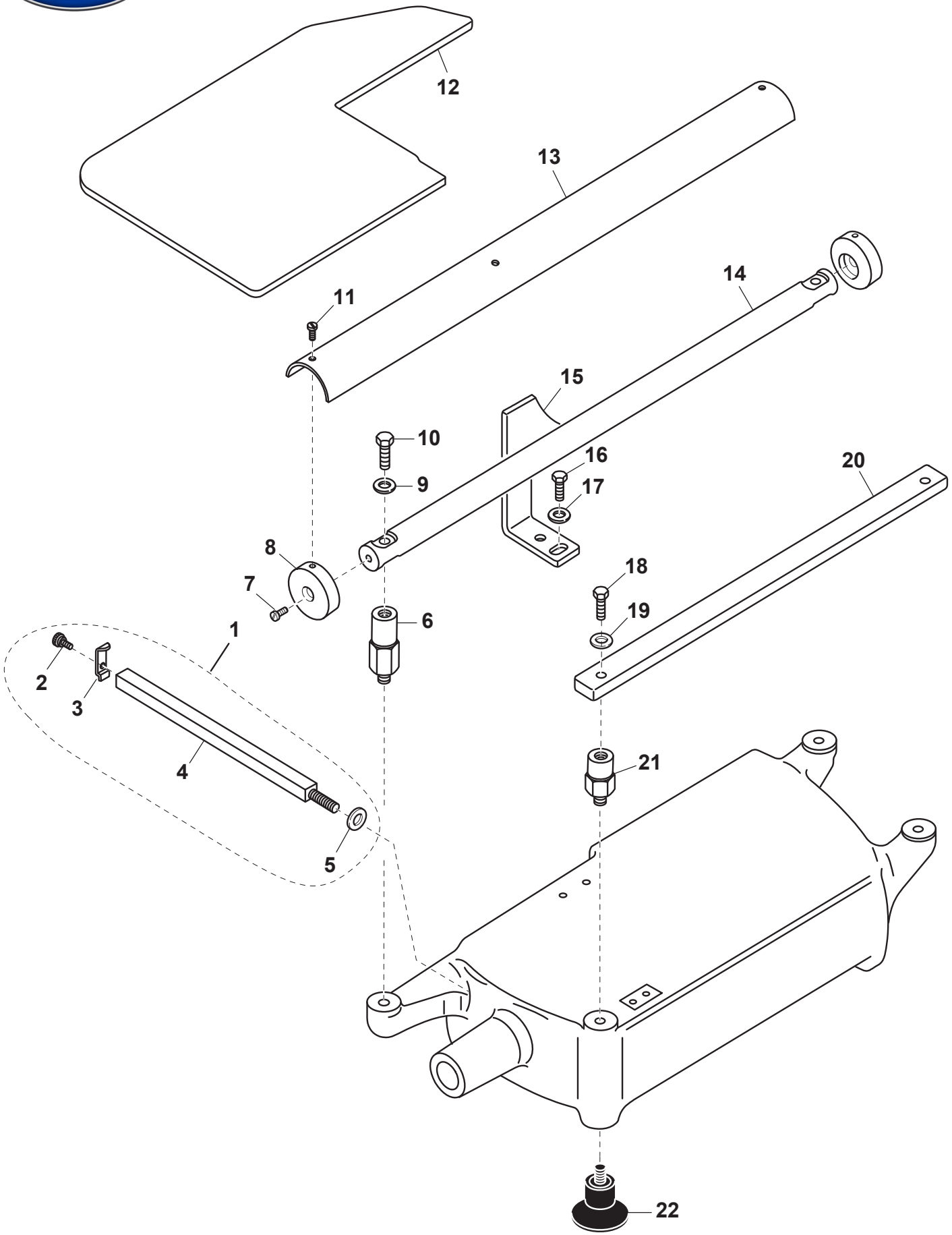

© Globe Food Equipment Company

FS12 Slide Rod Components

Item	Part Number	Description	Qty	Serial Number
1	R02248	Support Bar Assembly (Incls. items 2-5)	1	
2	H01574	Thumb Screw	1	
3		Support Bracket, Tray	1	
4		Support Bar	1	
5	H01573	Washer M4x12mm	2	
6		Support, Slide Rod	2	
7	H02238	Screw, Set M4-18 mm	2	
8		Stop, Round Bar	2	
9	H02564	Washer	2	
10	H02236	Screw, Hex Cap M8-1.25x31.75mm	2	
11	H02239	Screw, Flat Hd Slotted M3-0.5x6.35mm	2	
12	R02573	Tray, SS	1	
13		Cover, Slide Bar	1	
14	R02116	Slide Rod	1	
15		Support Bracket, Slide Rod	1	
16	X08007	Screw, M6-1.0 x 16 mm Hex Hd	1	
17	H02565	Washer	1	
18	H02237	Screw, Flat Hd Slotted M8-1.25 x .20.32mm	2	
19	H02564	Washer	4	
20	R02117	Slide Bar	1	
21		Support, Slide Bar	2	
22	R01369	Foot	4	

© Globe Food Equipment Company

FS12 Knife Blade Components

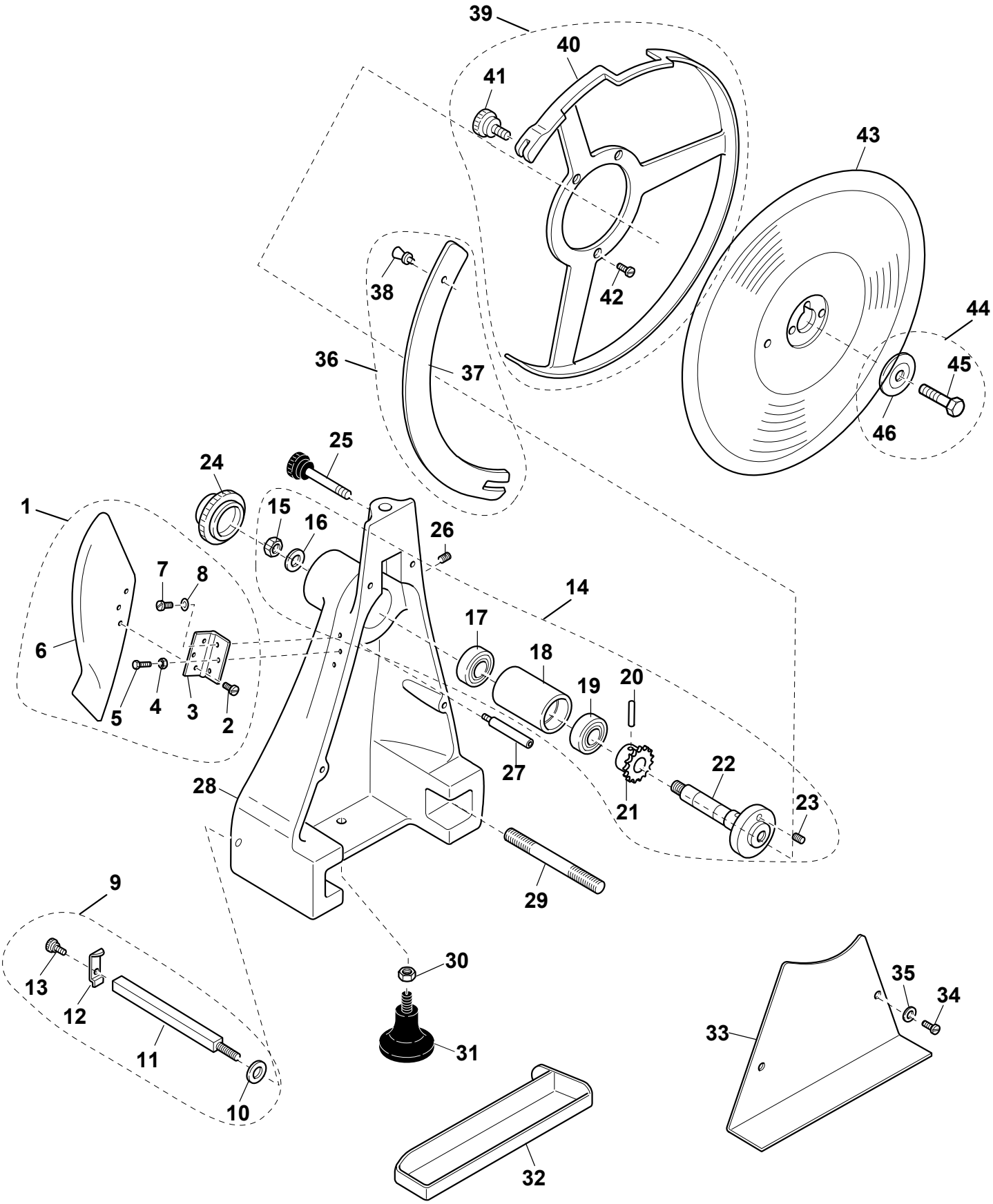

© Globe Food Equipment Company

FS12 Knife Blade Components

Item	Part Number	Description	Qty	Serial Number
1	R02349	Deflector Assembly (Incls. items 2-8)	1	
2	H02566	Screw, Thumb M4-0.7 x 8.89mm	3	
3		Hinge	1	
4	H02567	Nut, M8-1.25	3	
5	H02566	Screw, Thumb M4-0.7 x 8.89mm	3	
6		Slice Deflector	1	
7	H02566	Screw, Thumb M4-0.7 x 8.89mm	3	
8	H02567	Nut, M8-1.25	3	
9	R02350	Support Bar Kit (Incls. items 10-13)	1	
10	H01573	Washer M4x12mm	1	
11		Support Bar	1	
12		Support Bracket, Tray	1	
13	H01574	Thumb Screw	1	
14	R02351	Bearing Assembly (Incls. items 15-23)	1	
15		Nut	1	
16	H01898	Washer	1	
17		Bearing	1	
18		Sleeve, Bearing	1	
19		Bearing	1	
20	R02358	Tapered Pin	1	
21		Gear	1	
22		Bearing and Shaft	1	
23		Set Screw, Hex Recessed M6-1.0 x 7.62mm	1	
24	R02130	Cap	1	
25	R02667	Knob	1	
26	H02376	Set Screw, Hex Recessed M6-1.0 x 7.62mm	1	
27	R02191	Spacer	1	
28		Knife Housing	1	
29		Rod, Threaded M12-1.5x102 mm	2	
30	H02567	Nut, M8-1.25	1	
31	R01369	Foot	1	
32	R02352	Drip Tray	1	
33	R02128	Guard	1	
34	H02370	Screw	2	
35	H02371	Washer	2	
36	R02362	Knife Guard Assembly (Incls. items 37-38)	1	
37		Guard, Knife	1	
38	R01704	Thumb Screw	1	
39	R02360	Rim Guard (Incls. items 40-42)	1	
40		Rim Guard, Knife	1	
41		Thumb Screw	1	
42	H02361	Screw, Slotted Top M5-0.8 x 12.7mm	3	
43	R02126	Knife	1	
44	R02363	Knife Securing Kit (Incls. items 45-46)	1	
45	H02364	Screw, Hex Cap M8-1.25	1	
46		Washer, Knife	1	
47	R02244	Warning Label (Not Shown)	1	
48	H01573	Washer M4x12mm (Not Shown)	2	
49	H02359	Nut, Hex M5-0.8 (Not Shown)	2	

© Globe Food Equipment Company

FS12 Carriage Assembly Components

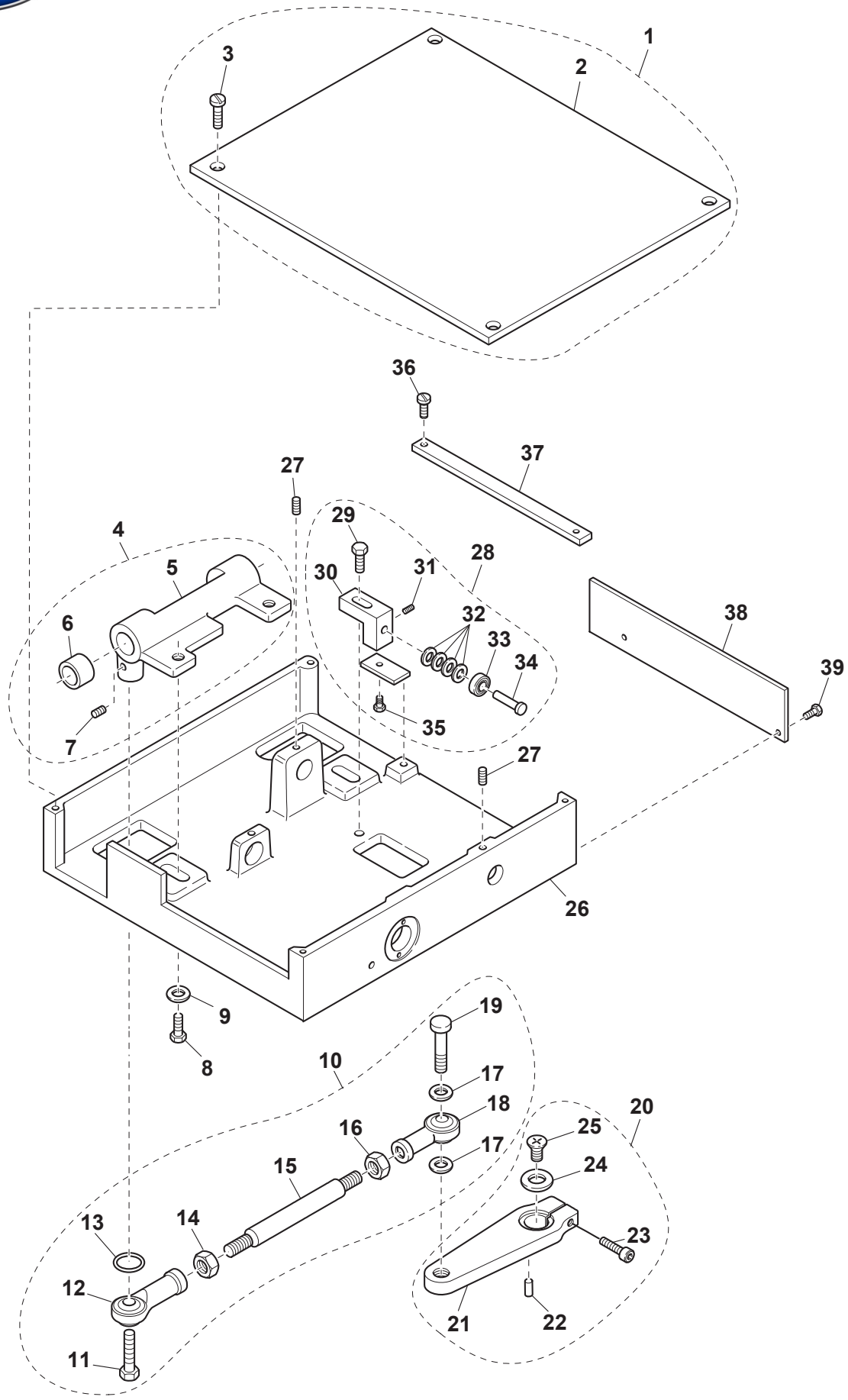

© Globe Food Equipment Company

FS12 Carriage Assembly Components

Item	Part Number	Description	Qty	Serial Number
1	R02378	Base Cover Assembly (Incls. items 2-3)	1	
2		Carriage Base Cover	1	
3	H02379	Threaded Rod	4	
4	R02380	Slide Assembly (Incls. items 5-7)	1	
5		Slide	1	
6	R01383	Bushing	1	
7	R02383	Set Screw, Hex Hd Recessed M5-0.8 x 6.35 mm	1	
8	R02381	Screw, Hex Hd Cap M8-1.25 x 25.4 mm	2	
9	R02382	Washer 31.75 OD x 8.255 ID mm	2	
10	R02384	Tie Rod Assembly (Incls. items 11-19)	1	
11	H02385	Screw, Hex Hd Cap M10-1.5 x 38.1 mm	1	
12		Tie Rod Joint	1	
13	R02386	O-Ring	1	
14	H02387	Nut, Hex Hd Jam M10-1.25	2	
15		Tie Rod	1	
16	H02387	Nut, Hex Hd Jam M10-1.25	1	
17		Washer, Brass	2	
18		Tie Rod Joint	1	
19	H02389	Cap Screw, Socket Hd	1	
20	R02390	Inertia Chute Drive Assembly (Incls. items 21-25)	1	
21		Inertia Chute Drive	1	
22	H02392	Plug	1	
23	H02393	Cap Screw M6-1.0 x 31.75 mm	1	
24	H02395	Washer M6 OD 1.25	1	
25	H01690	Screw M8-1.25x20mm Socket Hd Cap	1	
26		Carriage Base	1	
27	H02407	Set Screw, Hex Hd Rec. M5-0.8 x 12.7mm	2	
28	R02396	Support Bracket Assembly (Incls. items 29-35)	1	
29	H00196	Screw	1	
30		Support Bracket, Slide Bar	1	
31		Set Screw, M5-.8 x 7.62 mm	1	
32		Washer	4	
33		Bearing	1	
34		Pin	1	
35		Screw, Hex Recessed Flat Hd M4-.7x13 mm	1	
36	R02404	Screw, Slotted Cap M5-0.8 x 12.7 mm	2	
37		Slide Bar, Inner Carriage	1	
38		Carriage Cover, Rear	1	
39	H02406	Screw, Flat Hd Slotted M3-0.5 x 12.7 mm	2	
40	H02375	Screw, Thumb M6-1.0 (Not Shown)	1	

© Globe Food Equipment Company

FS12 Carriage Slide Components

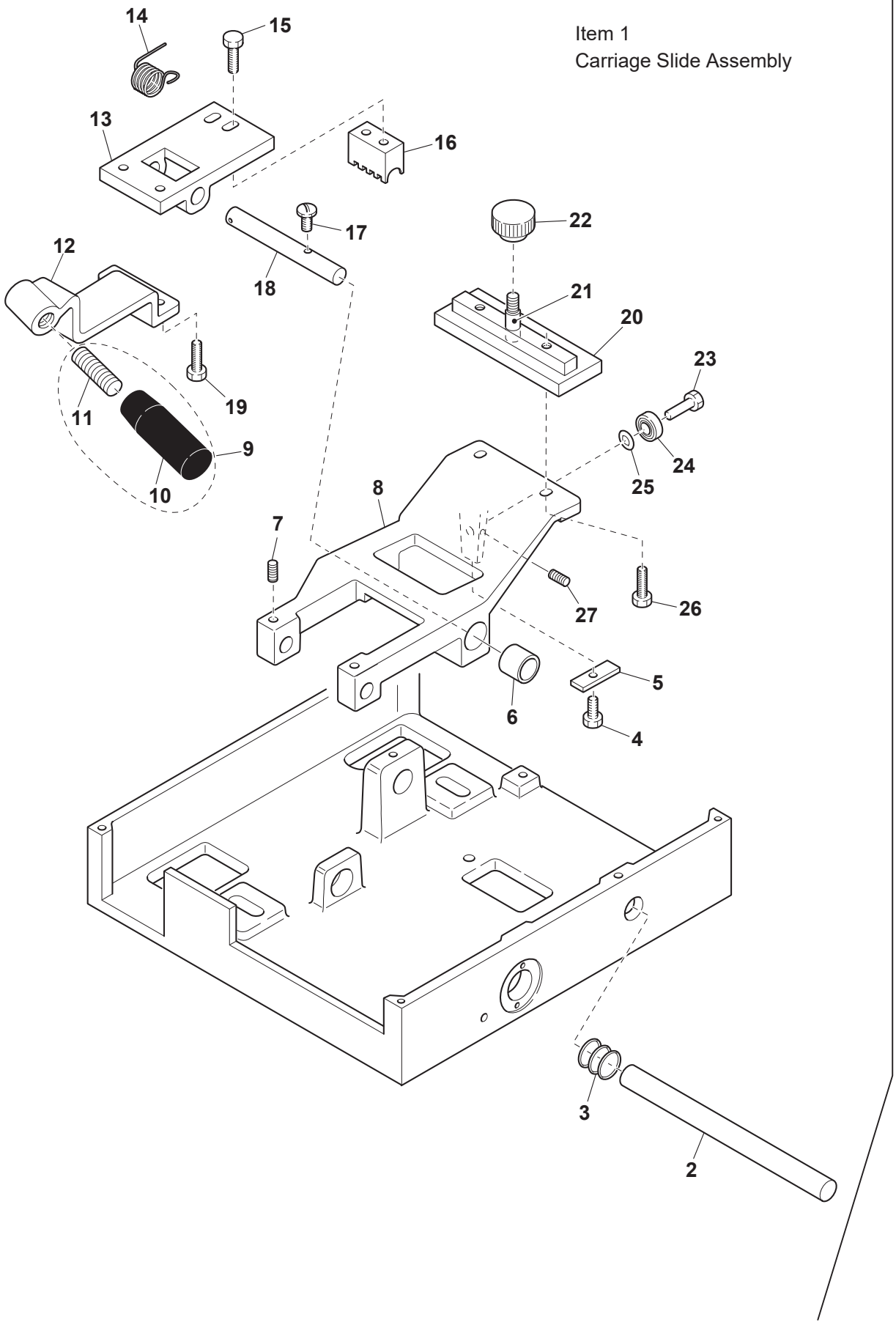

© Globe Food Equipment Company

FS12 Carriage Slide Components

Item	Part Number	Description	Qty	Serial Number
1	R02408	Carriage Slide Assembly (Incls. items 2-27)	1	
2	R01785	Slide Rod	1	
3	R02179	Spring	1	
4		Screw, Slotted Cap M4-0.7x12.7mm	1	
5		Plate, Nut	1	
6		Bushing	2	
7		Set Screw, Hex Hd Recessed M5-0.8x2.5mm drive	2	
8		Slide, Carriage	1	
9	R02411	Handle Assembly (Incls. items 10-11)	1	
10		Operating Handle, Flywheel	1	
11		Rod, Threaded M6-1.5 x 51 mm	1	
12		Lever, Operating Handle	1	
13		Support Mount, Carriage	1	
14		Spring	1	
15		Screw, Hex Cap M6-1.0 x 12.7 mm	2	
16	R02200	Comb Block	1	
17		Screw, FH Slotted M4-0.7	1	
18		Pin, Tapered	1	
19		Screw, Hex Cap M6-1.0 x 15.875 mm	2	
20		Mount, Product Holder	1	
21		Mount Stud, Product Holder	1	
22	R02143	Release Knob	1	
23	H02426	Press Pin	1	
24		Bearing	1	
25		Washer, OD 11.43 x ID 6.35 mm	1	
26		Screw, Hex Cap M6-1.0 x .25 mm	2	
27		Set Screw, Hex Hd Recessed M4-0.7 2 x 6 mm drive	1	

© Globe Food Equipment Company

FS12 Product Holder Components

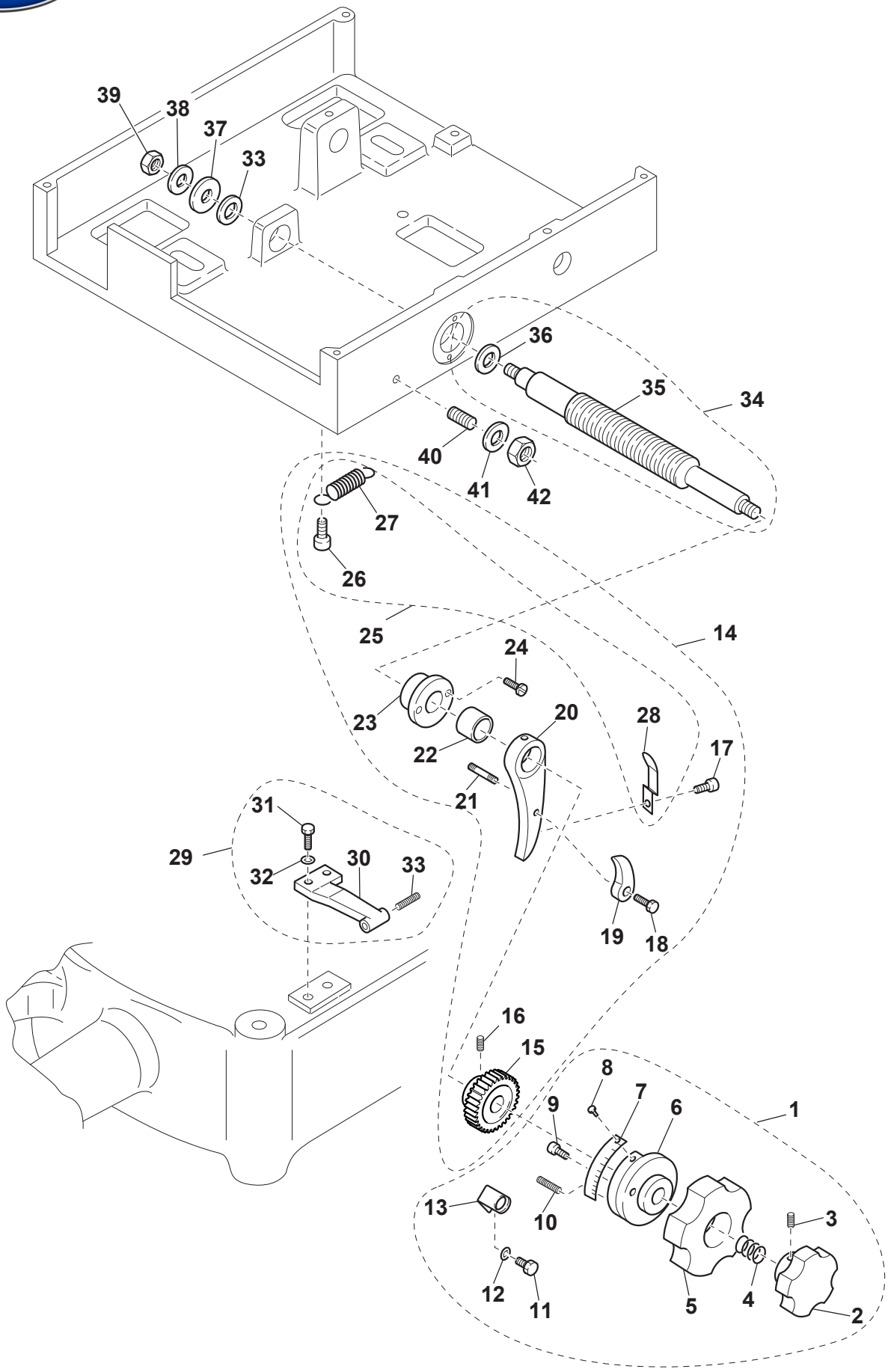

© Globe Food Equipment Company

FS12 Product Holder Components

Item	Part Number	Description	Qty	Serial Number
1	R02427	Operating Knob Assembly (Incls. items 1-13)	1	
2		Product Holder Operating Knob	1	
3		Set Screw, Flat Hd Slotted M6-1.0 x 6.35 mm	1	
4		Spring	1	
5		Control Knob, Thickness	1	
6		Index Guide Cam	1	
7		Index Guide	2	
8		Revit	2	
9		Screw, Flat Hd Slotted M4-0.7 x 7.62 mm	1	
10		Set Screw, Slotted M4-0.7 x 19.05 mm	1	
11		Screw, Slotted Cap M4-0.7 x 12.7 mm	1	
12		Washer OD 9.0 x ID 4.0 mm	1	
13		Index Number Indicator	1	
14	R02571	Assembly, Skip Latch (Incls. items 15-28)	1	
15		Gear	1	
16		Set Screw, Flat Hd Slotted M6-1.0 x 6.35 mm	1	
17		Screw, Slotted Cap M4-0.7	1	
18		Screw, Flat Hd Slotted M5-0.8 x 12.7 mm	1	
19		Skip Latch, Small	1	
20		Skip Latch, Large	1	
21		Pin M5-0.8 x .25 mm	1	
22		Bushing	1	
23		Bushing, Feed Screw	1	
24		Screw, Flat Hd Slotted M5-0.8 x 12.7 mm	2	
25	R02420	Spring Kit (Incls. items 26-28)	1	
26		Screw, Slotted Cap M4-0.7	1	
27		Spring	1	
28		Spring, Skip Latch	1	
29	R02433	Carriage Stop Assembly (Incls. items 30-33)	1	
30		Carriage Stop	1	
31		Screw, Hex Cap M6-1.0 x .25 mm	2	
32		Washer OD 17.78 x 6.35 ID mm	2	
33		Set Screw M8-1.25 x 31.75 mm	1	
34	R02419	Feed Screw Shaft Assembly (Incls. items 35-36)	1	
35		Shaft, Feed Screw	1	
36		Washer	2	
37		Washer, Wave	1	
38		Washer	1	
39		Nut M6-1.0mm Hex	1	
40		Set Screw M8-1.0	1	
41	H01898	Washer	1	
42		Nut M6-1.0mm Hex	1	

© Globe Food Equipment Company

FS12 Product Tray Components

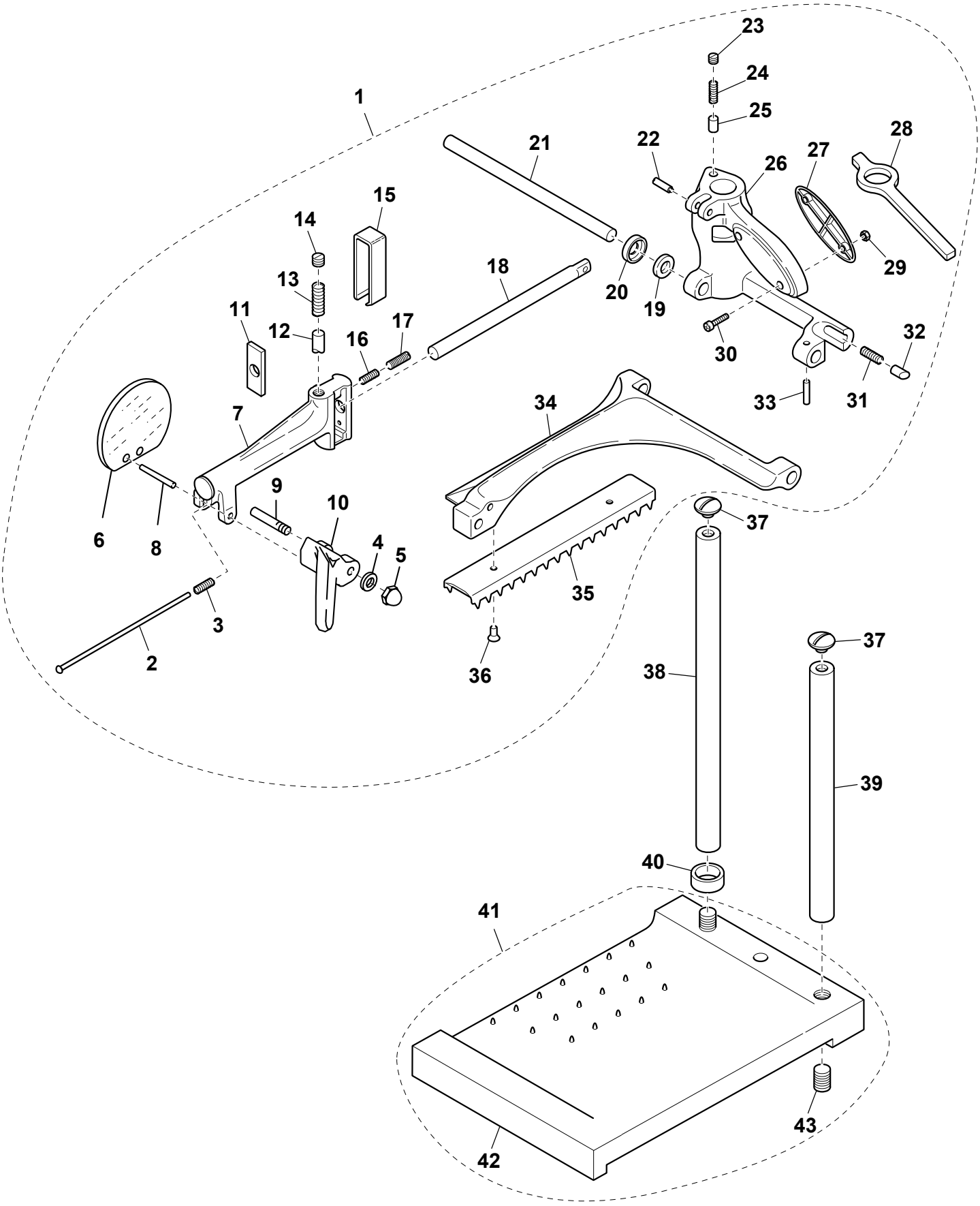

© Globe Food Equipment Company

FS12 Product Tray Components

Item	Part Number	Description	Qty	Serial Number
1	R02173	Arm Assembly (Incls. items 2-36)	1	
2		Rod	1	
3		Spring	2	
4	H01898	Washer	1	
5	H01938	Acorn Nut	1	
6	R02155	Guard	1	
7		Lever Arm	1	
8		Rod, Threaded	1	
9		Pin	1	
10		Lever	1	
11		Plate	1	
12		Plug, Brass Tension	1	
13		Spring	1	
14		Set M10-1.0 x 10.16 mm Screw	1	
15	R02159	Cover	1	
16		Spring	1	
17		Set M6-1.0 x 19.05 mm Screw	1	
18		Lever Arm Rod	1	
19		Bushing	1	
20		Spacer	1	
21		Arm Rod, Grip Plate	1	
22		Pin	1	
23		Set M8-1.25 x 10.16 Screw	1	
24		Spring	1	
25		Plug, Brass Tension	1	
26		Handle Support	1	
27	R02163	Grip	1	
28		Pusher Lever	1	
29	H02456	Nut	2	
30	H02457	Screw	2	
31		Spring	1	
32		Plug, Brass Tension	1	
33		Pin	1	
34		Grip Plate Arm	1	
35		Grip Plate	1	
36		Screw M5-0.8 x 22.86 mm Hex Cap	2	
37	H02468	Screw M8-1.25 x 12.7 mm Slotted	2	
38	R02195	Slide Rod, 11.5"	1	
39	R02168	Slide Rod,9"	1	
40	R02196	Spacer	2	
41	R02403	Sliding Product Holder Assembly (Incls. items 42-43)	1	
42		Holder, Sliding Product	1	
43	H02445	Set Screw	2	

© Globe Food Equipment Company

FS12 Sharpener Assembly Components

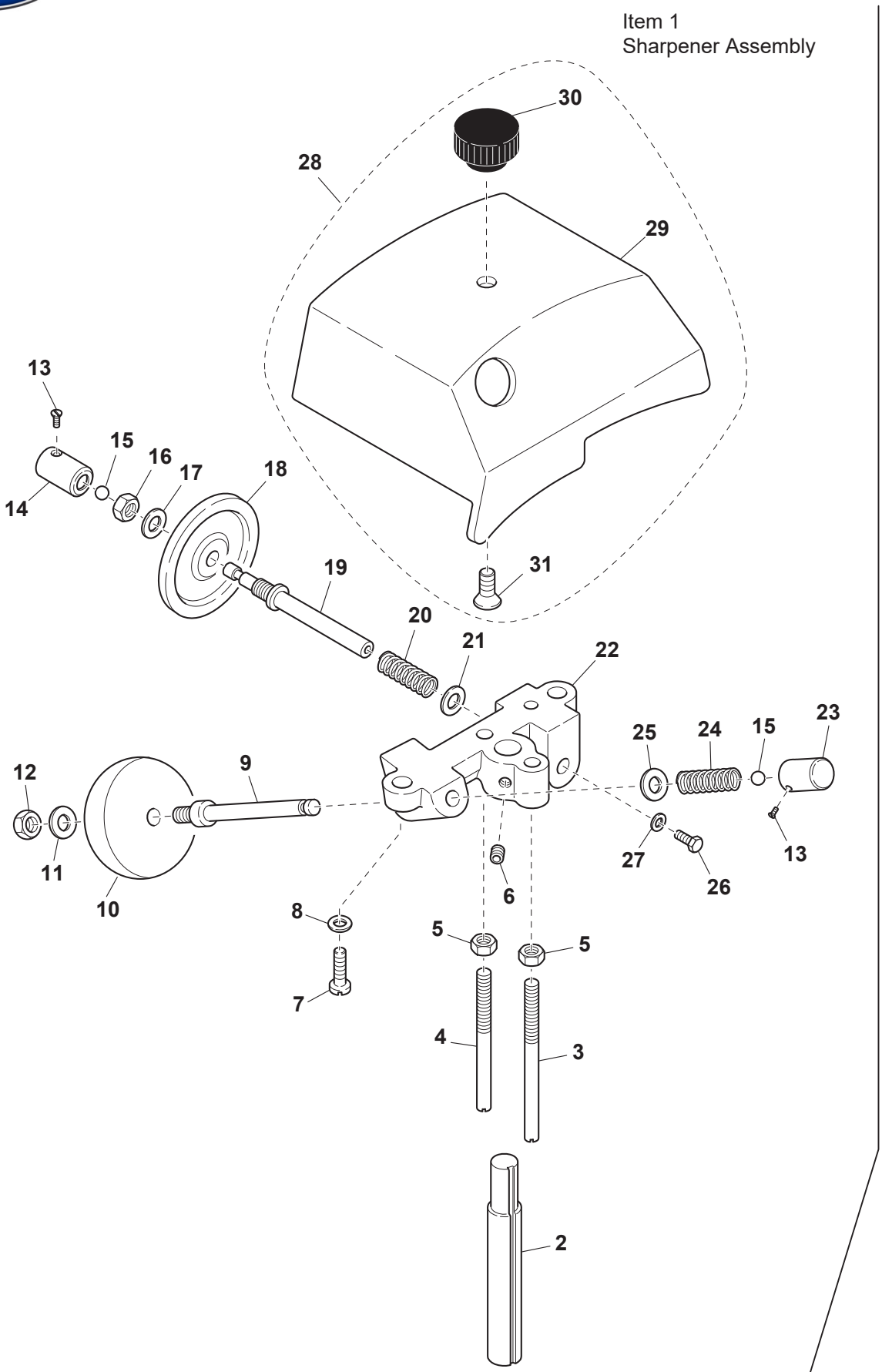

© Globe Food Equipment Company

FS12 Sharpener Assembly Components

Item	Part Number	Description	Qty	Serial Number
1	R02572	Sharpener Assembly (Incls. items 2-31)	1	
2		Shaft, Sharpener	1	
3		Pin	1	
4		Pin	1	
5		Nut M6-1.0mm Hex	2	
6		Set Screw M6-1.0x8mm Hex Hd	1	
7		Screw M5-0.8x16mm Flat Hd	2	
8	H01861	Washer M4x10OD mm Flat	2	
9		Shaft, Sharpener Stone	1	
10	R01854	Sharpening Stone	1	
11		Washer M6x13 OD mm Flat Hd	1	
12		Nut M6-1.0x10mm Hex	1	
13		Screw 45-1.45x3mm Flat Hd	2	
14		Push Button, Sharpener	1	
15		Bearing, Ball	2	
16		Nut M6-1.0x10mm Hex	1	
17		Washer M6x13 OD mm Flat Hd	1	
18	R01865	Deburring Stone	1	
19		Shaft, Sharpener Stone	1	
20		Spring	1	
21	H01573	Washer M4x12mm	1	
22		Housing, Sharpener	1	
23		Push Button, Sharpener	1	
24		Spring	1	
25	H01573	Washer M4x12mm	1	
26		Screw 39-.5x5mm Flat	1	
27		Washer M2.5x60 OD mm Flat	1	
28	R02563	Sharpener Cover Assembly (Incls. items 29-31)	1	
29		Cover, Sharpener	1	
30	R02172	Sharpener Cover Knob	1	
31	H02570	Screw, Hex Rec. Flat Hd M6-1.0 x 12 mm	1	

© Globe Food Equipment Company